Information

A Dolby Digital Encoding System for DVD

Introduction

Dolby Digital is a standard multichannel audio format for DVD all over the world. Until recently, Dolby Digital has been used almost exclusively in top professional DVD authoring studios and production facilities. With the recent introduction of the DP569 Dolby Digital Multichannel Encoder, however, Dolby Digital is now an affordable and accessible technology for most music and post-production studios that prepare, mix, and encode 5.1-channel audio for DVD.

An integrated system is now available from Dolby Laboratories that uses a PC running Windows to create a workstation for Dolby Digital encoding for DVD. This system is based on the DP569 Dolby Digital Encoder, which is significantly less expensive than previous Dolby Digital encoders. The system consists of the following hardware and software:

- **DP569 Dolby Digital Encoder:** 1-U, rack-mount device that encodes 5.1 audio channels and metadata into a Dolby Digital stream:
- **DP562 Multichannel Dolby Digital/Pro Logic Decoder:** 1-U, rack-mount device that decodes Dolby Digital and Pro Logic streams;
- **DolbyRemote:** Software that controls the DP569 Dolby Digital Encoder;
- **Dolby Digital Recorder (Cat. No. 542):** Software that takes an encoded Dolby Digital data stream from the DP569 and records it to disk as an .ac3 file.

System Benefits

This versatile system features user-friendly desktop control with the reliability and speed of a hardware-based system. Dolby Digital audio files can be easily delivered from the recording studio to the authoring station on a removable disk, CD-R, or sent over a network.

In addition to the encoded audio, Dolby Digital carries *metadata* that is input during encoding to control audio parameters in a consumer decoder. Metadata allows the decoder to:

- fit multichannel program material to the number and configuration of speakers (*Downmixing*);
- play back all programs with consistent loudness (*Dialogue Normalization*);
- alter the dynamic range to suit different listening conditions and/or equipment capabilities (*Dynamic Range Control*).

Dolby Laboratories Inc. 100 Potrero Avenue, San Francisco, CA 94103-4813 Telephone 415-558-0200 Fax415-863-1373
Wooten Bassett, Wiltshire, SN4 8QJ, England Telephone(44) 1793-842100 Fax (44) 1793-842101 www.dolby.com

Issue 3
S00/12848/13267
Part No. 91663

Dolby and the double-D symbol are trademarks of Dolby Laboratories ©2000 Dolby Laboratories Inc.

Choosing the correct values for these and other metadata parameters is a vital step in the Dolby Digital encoding process. Audio engineers can now set metadata values in their own facility with the confidence that the consumer will experience the audio as closely as possible to what the producer intended.

This system can also fit into an existing DVD facility as a perfect upgrade to real-time multichannel audio coding, freeing up time on the DVD authoring station and making the entire process more efficient.

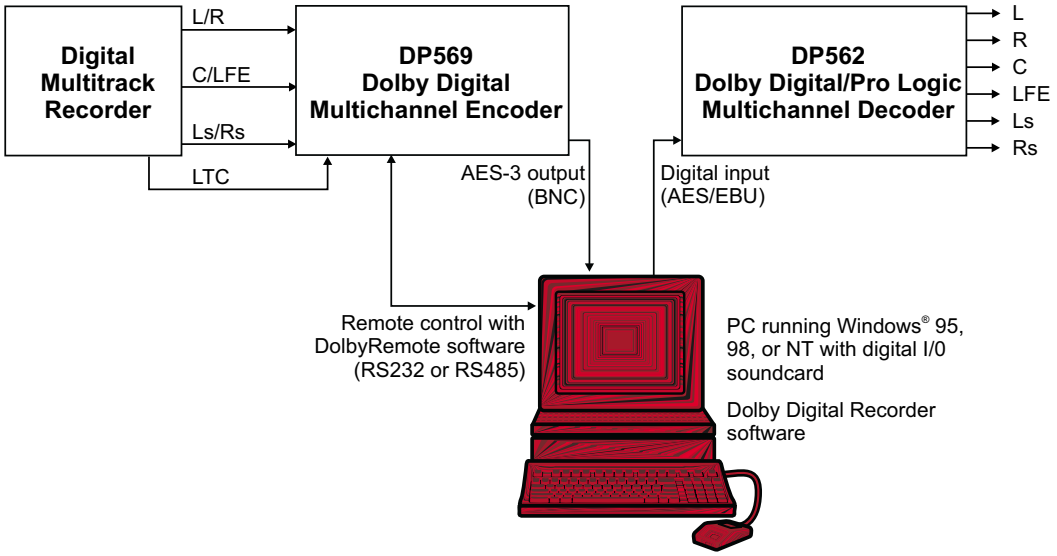

Figure 1 DVD encoding system block diagram

Software Features

The DolbyRemote and Dolby Digital Recorder software can simultaneously control the DP569 Dolby Digital Encoder and write the encoded .ac3 file to the hard disk on a Windows PC. Program windows from both applications appear on the next page.

The Dolby Digital Recorder software enables the user to:

- record .ac3 files, including time stamps, that are compatible with all DVD authoring platforms;
- insert data seamlessly into the encoded audio using the *punch-in* time display;
- perform non-destructive editing;
- detect playback and record frame errors and generate an *error.log* file;
- locate specific points in the recorded file quickly and easily with the *Go To* option and file position slider;
- view SMPTE time code, absolute elapsed time, or frame count;
- compare and verify *actual bitstream* and *reference* SMPTE time stamps;
- view main bitstream parameters contained within the .ac3 file.

The DolbyRemote program allows the user to:

- use the Input level and Dynamic Range Control meters to obtain visual feedback while setting metadata parameters;
- control multiple DP569s from a single instance of the DolbyRemote application;
- save and restore DP569 settings with a file;
- export DP569 settings as a text or HTML file;
- configure the software in an offline mode without a DP569.

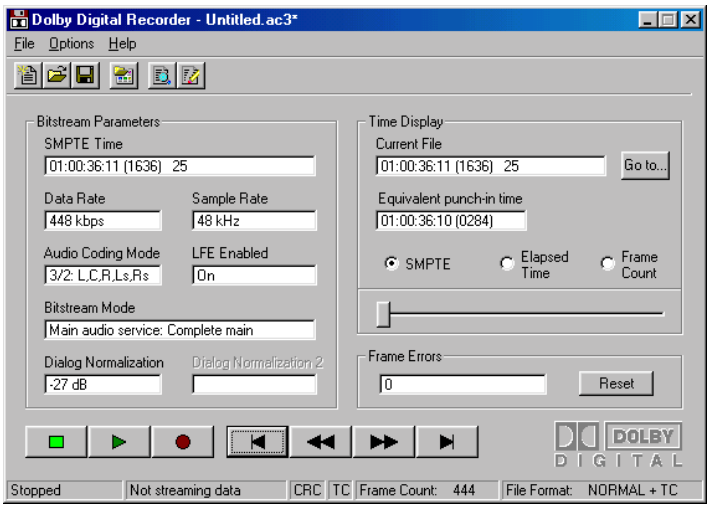

Figure 2 Dolby Digital Recorder window

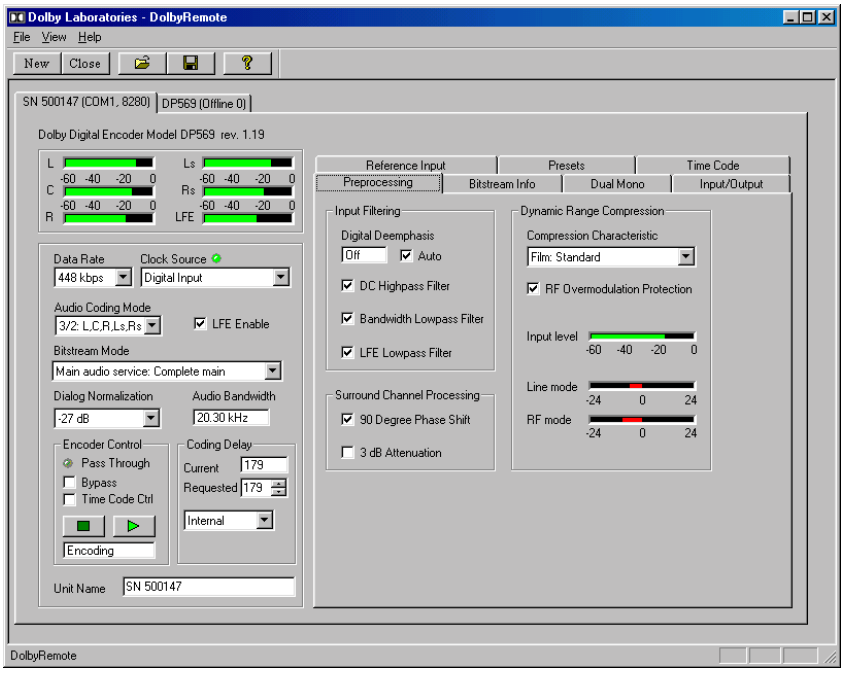

Figure 3 DolbyRemote window

Computer Requirements

The Dolby DVD encoding system requires a PC running Windows® 95, 98, or NT, with standard serial ports to control the DP569 Dolby Digital Encoder, and an unused expansion slot for a digital soundcard with an AES-EBU or S/PDIF input (see list of soundcards below). A separate hard drive is recommended to store Dolby Digital data files that require approximately 3 MB per minute of audio.

Sound Card Information for the Dolby Digital Recorder

Although the Dolby Digital Recorder program has been used with the six digital I/O sound cards listed below, they have not been tested with all versions of the Windows operating system (Dolby Digital Recorder does not work with the Windows 2000 operating system). Sound cards from other manufacturers may also be suitable. Use the contact information below to learn more about these sound cards.

Prodif Plus by SEK'D
Web: http://www.sekd.com
Local dealer: http://www.sekd.com/distri.htm

Lynx One by Lynx Studio Technology
Lynx Studio Technology, Inc.
1048 Irvine Avenue, PMB 468
Newport Beach, CA 92660-4602
Web: http://www.lynxstudio.com
e-mail: sales@lynxstudio.com
Phone: 949-515-8265
Fax: 949-645-8470

ZA2 DAT interface card by Zefiro Acoustics
Zefiro Acoustics
P.O. Box 50021
Irvine, CA 92619-0021
Web: http://www.zefiro.com/main.htm
e-mail: info@zefiro.com
Phone: 949-551-5833
Fax: 949-653-2260

SoundTrack Audio DSP 24 by Hoontech Co. Ltd
Hoontech co. Ltd
4th Flr., Minkyung Bldg.,
#332 Songne-1Dong,
Sosa-ku, Bucheon, Kyung Ki-Do, Korea
Web: http://www.hoontech.com/
Fax : (82-32)612-0079

DATPort by Opcode
Opcode Systems, Inc.
1818 Elm Hill Pike
Nashville, TN 37210

Web: http://www.opcode.com
Phone: 1-877-999-4199

Delta DIO 2496 by M-Audio
45 E. Saint Joseph Street,
Arcadia, CA 91006
Web: http://www.midiman.com/m-audio.htm
Distributors: http://www.midiman.com/ids.htm
Phone: 800-969-6434

Contact Dolby Laboratories or an authorized Dolby dealer or distributor for additional information on the Dolby Digital encoding system for DVD.